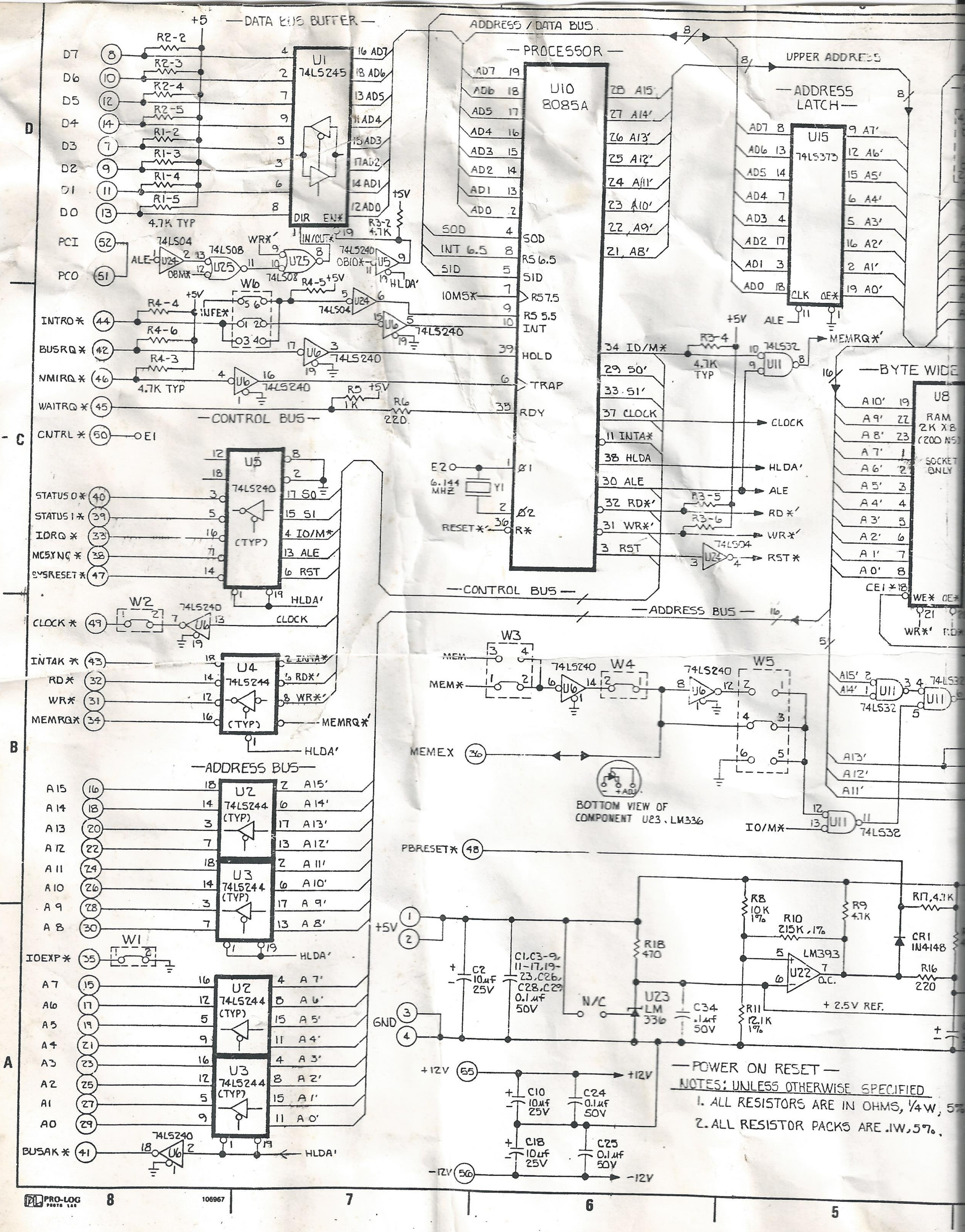

DATA BUS BUFFER
+5
D7 8
D6 10
D5 12
D4 14
D3 7
D2 9
D1 11
D0 13
R2-2
R2-3
R2-4
R2-5
R1-2
R1-3
R1-4
R1-5
4.7K TYP
U1
74LS245
DIR
EN*
IN/OUT*
16 AD7
18 AD6
13 AD5
11 AD4
15 AD3
17 AD2
14 AD1
12 AD0
PCI 52
PCO 51
ALE
74LS04
U24
OBM*
74LS08
U25
WR*'
74LS240
OBIO*
U5
HLDA'
R3-2
4.7K
+5V
INTRO* 44
BUSRQ* 42
NMIRQ* 46
WAITRQ* 45
CNTRL* 50
EI
R4-4
R4-6
R4-3
4.7K TYP
R4-5
INFE*
W6
U6
74LS240
R5
1K
R6
220
CONTROL BUS
ADDRESS / DATA BUS
PROCESSOR
U10
8085A
AD7 19
AD6 18
AD5 17
AD4 16
AD3 15
AD2 14
AD1 13
AD0 12
SOD 4
INT 6.5 8
SID 5
IOMS* 7
RS 7.5
RS 5.5
INT
HOLD 39
TRAP 6
RDY 35
Ø1
Ø2
R* 36
E2
6.144 MHZ
Y1
RESET*
28 A15'
27 A14'
26 A13'
25 A12'
24 A11'
23 A10'
22 A9'
21 A8'
34 IO/M*
29 S0'
33 S1'
37 CLOCK
11 INTA*
38 HLDA
30 ALE
32 RD*'
31 WR*'
3 RST
R3-4
4.7K TYP
R3-5
R3-6
74LS32
U11
MEMRQ*'
CLOCK
HLDA'
ALE
RD*'
WR*'
RST*
UPPER ADDRESS
ADDRESS LATCH
U15
74LS373
AD7 8
AD6 13
AD5 14
AD4 7
AD3 4
AD2 17
AD1 3
AD0 18
CLK
OE*
9 A7'
12 A6'
15 A5'
6 A4'
5 A3'
16 A2'
2 A1'
19 A0'
BYTE WIDE
U8
RAM
2K X 8
(200 NS)
SOCKET ONLY
A10' 19
A9' 22
A8' 23
A7' 1
A6' 2
A5' 3
A4' 4
A3' 5
A2' 6
A1' 7
A0' 8
CE1* 18
WE* 21
OE*
WR*'
STATUS 0* 40
STATUS 1* 39
IORQ* 33
MCSYNC* 38
SYSRESET* 47
U5
74LS240
(TYP)
17 S0
15 S1
4 IO/M*
13 ALE
6 RST
HLDA'
CLOCK* 49
W2
74LS240
U6
CLOCK
INTAK* 43
RD* 32
WR* 31
MEMRQ* 34
U4
74LS244
(TYP)
2 INTA*
6 RD*'
8 WR*'
MEMRQ*'
HLDA'
CONTROL BUS
ADDRESS BUS
W3
MEM
MEM*
W4
W5
74LS240
U6
MEMEX 36
BOTTOM VIEW OF COMPONENT U23, LM336
A15' A14'
U11
74LS32
A13'
A12'
A11'
IO/M*
74LS32
ADDRESS BUS
A15 16
A14 18
A13 20
A12 22
A11 24
A10 26
A9 28
A8 30
U2
74LS244
(TYP)
U3
74LS244
(TYP)
2 A15'
6 A14'
17 A13'
13 A12'
2 A11'
6 A10'
17 A9'
13 A8'
HLDA'
IOEXP* 35
W1
A7 15
A6 17
A5 19
A4 21
A3 23
A2 25
A1 27
A0 29
4 A7'
8 A6'
15 A5'
11 A4'
4 A3'
8 A2'
15 A1'
11 A0'
BUSAK* 41
74LS240
U6
HLDA'
PBRESET* 48
+5V 1 2
GND 3 4
C2
10µf
25V
C1,C3-9,
11-17,19-
23,C26,
C28,C29
0.1µf
50V
N/C
U23
LM 336
C34
.1µf
50V
R18
470
R8
10K
1%
R10
215K, 1%
R9
4.1K
R11
12.1K
1%
LM393
U22
O.C.
+2.5V REF.
R17, 4.1K
CR1
1N4148
R16
220
+12V 55
+12V
C10
10µf
25V
C24
0.1µf
50V
C18
10µf
25V
C25
0.1µf
50V
-12V 56
-12V
D
C
B
A
8
7
6
5
PRO-LOG
106967

POWER ON RESET

NOTES: UNLESS OTHERWISE SPECIFIED

1. ALL RESISTORS ARE IN OHMS, 1/4 W, 5%

2. ALL RESISTOR PACKS ARE .1W, 5%.

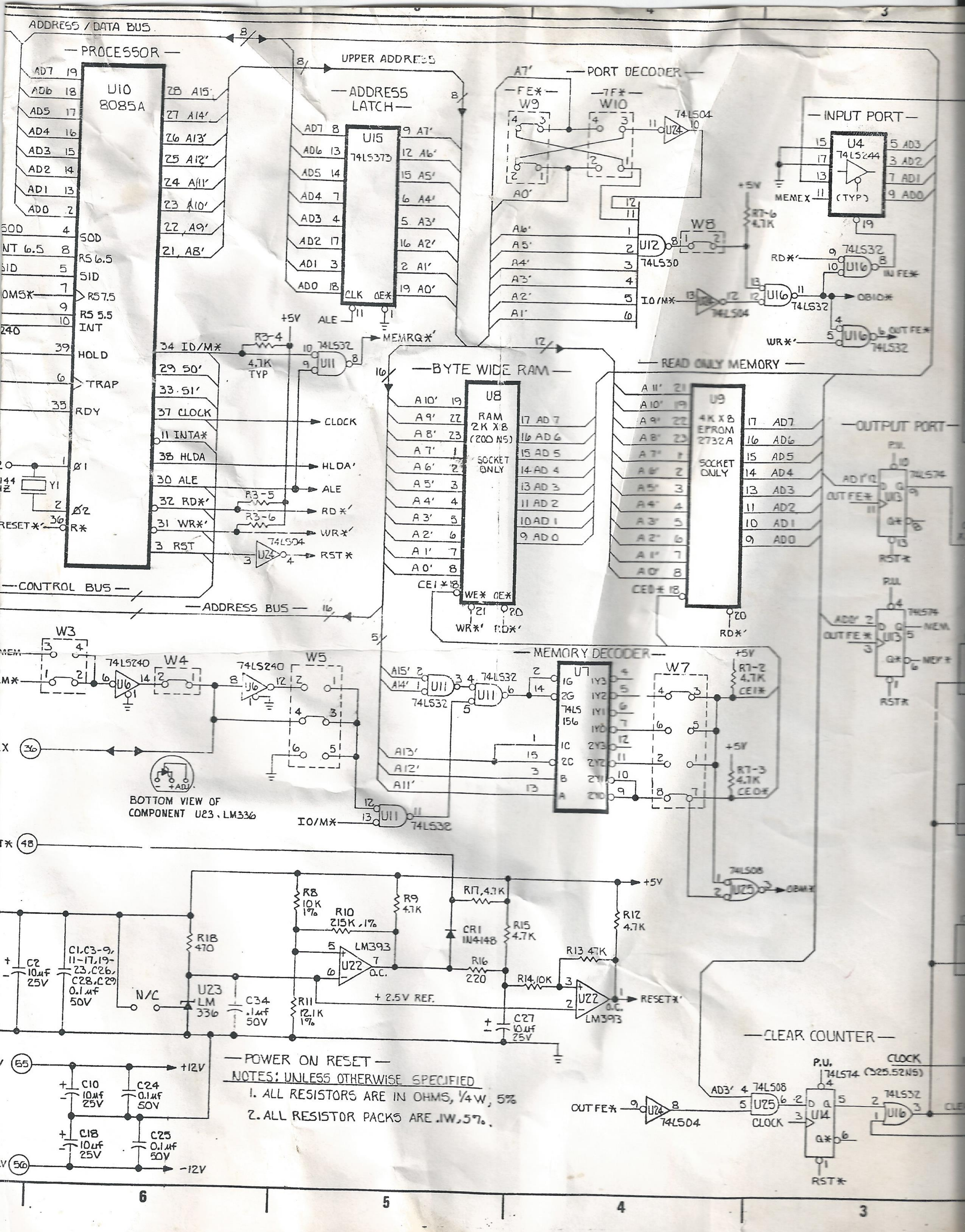

ADDRESS / DATA BUS
8
— PROCESSOR —
U10
8085A
AD7 19
AD6 18
AD5 17
AD4 16
AD3 15
AD2 14
AD1 13
AD0 2
SOD 4 SOD
INT 6.5 8 RS 6.5
SID 5 SID
7 RS7.5
9 RS 5.5
10 INT
39 HOLD
6 TRAP
35 RDY
1 Ø1
Y1
2 Ø2
RESET*′ 36 R*
28 A15′
27 A14′
26 A13′
25 A12′
24 A11′
23 A10′
22 A9′
21 A8′
34 IO/M*
29 S0′
33 S1′
37 CLOCK
11 INTA*
38 HLDA
30 ALE
32 RD*′
31 WR*′
3 RST
— CONTROL BUS —
— ADDRESS BUS —
16
UPPER ADDRESS
— ADDRESS LATCH —
U15
74LS373
AD7 8
AD6 13
AD5 14
AD4 7
AD3 4
AD2 17
AD1 3
AD0 18
CLK
OE*
ALE
9 A7′
12 A6′
15 A5′
6 A4′
5 A3′
16 A2′
2 A1′
19 A0′
+5V
R3-4
4.7K TYP
74LS32
U11
MEMRQ*′
CLOCK
HLDA′
ALE
R3-5
R3-6
RD*′
WR*′
74LS04
U24
RST*
A7′
— PORT DECODER —
—FE*—
W9
—7F*—
W10
A0′
74LS04
U24
A6′
A5′
A4′
A3′
A2′
A1′
U12
74LS30
W8
IO/M*
74LS04
+5V
R7-6 4.7K
U16
74LS32
— INPUT PORT —
U4
74LS244
MEMEX
(TYP)
5 AD3
3 AD2
7 AD1
9 AD0
RD*′
U16
74LS32
IN FE*
OBIO*
WR*′
U16
OUT FE*
74LS32
— BYTE WIDE RAM —
U8
RAM
2K X 8
(200 NS)
SOCKET ONLY
A10′ 19
A9′ 22
A8′ 23
A7′ 1
A6′ 2
A5′ 3
A4′ 4
A3′ 5
A2′ 6
A1′ 7
A0′ 8
CE1* 18
WE*
OE*
21 WR*′
20 RD*′
17 AD7
16 AD6
15 AD5
14 AD4
13 AD3
11 AD2
10 AD1
9 AD0
— READ ONLY MEMORY —
U9
4K X 8
EPROM
2732A
SOCKET ONLY
A11′ 21
A10′ 19
A9′ 22
A8′ 23
A7′ 1
A6′ 2
A5′ 3
A4′ 4
A3′ 5
A2′ 6
A1′ 7
A0′ 8
CE0* 18
20 RD*′
17 AD7
16 AD6
15 AD5
14 AD4
13 AD3
11 AD2
10 AD1
9 AD0
— OUTPUT PORT —
P.U.
AD1′ 2
OUT FE*
74LS74
U13
Q*
RST*
AD0′ 2
OUT FE*
74LS74
U13
MEM
MEX*
RST*
MEM
W3
MEM*
74LS240
U6
W4
74LS240
U6
W5
MEMEX 36
BOTTOM VIEW OF COMPONENT U23, LM336
+ADJ
A15′
A14′
U11
74LS32
U11
— MEMORY DECODER —
U7
74LS 156
1G
2G
1Y3
1Y2
1Y1
1Y0
1C
2C
B
A
2Y3
2Y2
2Y1
2Y0
A13′
A12′
A11′
IO/M*
U11
74LS32
W7
+5V
R7-2 4.7K
CE1*
+5V
R7-3 4.7K
CE0*
74LS08
U25
OBM*
RESET* 48
R8 10K 1%
R10 215K, 1%
R9 4.7K
R17, 4.7K
CR1 1N4148
R15 4.7K
R12 4.7K
+5V
R18 470
LM393
U22
O.C.
R16 220
R13 47K
R14 10K
U22
LM393
O.C.
RESET*′
+ 2.5V REF.
C2 10uf 25V
C1-C3-9, 11-17, 19-23, C26, C28, C29 0.1uf 50V
N/C
U23 LM 336
C34 .1uf 50V
R11 12.1K 1%
C27 10uf 25V
— POWER ON RESET —
55
+12V
C10 10uf 25V
C24 0.1uf 50V
C18 10uf 25V
C25 0.1uf 50V
56
-12V
— CLEAR COUNTER —
CLOCK (325.52NS)
P.U.
74LS74
AD3′ 4
74LS08
U25
OUT FE*
U24
74LS04
CLOCK
U14
Q*
RST*
74LS32
U16
6
5
4
3

NOTES: UNLESS OTHERWISE SPECIFIED

1. ALL RESISTORS ARE IN OHMS, 1/4W, 5%

2. ALL RESISTOR PACKS ARE .1W, 5%.

REVISIONS

DOC REV	DESCRIPTION	DATE	APPR
A	INITIAL RELEASE PER PCN#4742	3/10/82	RB

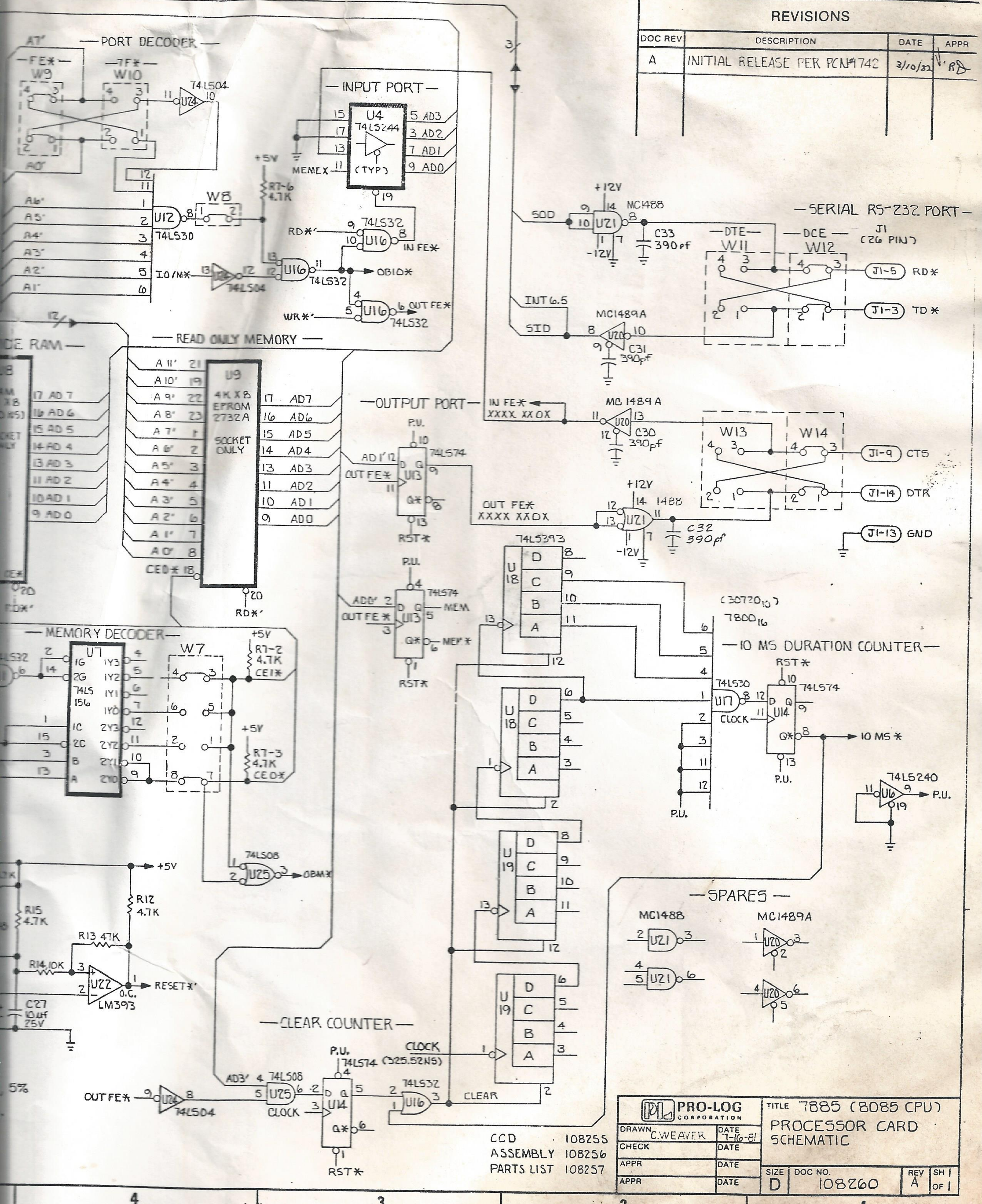

PORT DECODER
A7'
FE*
7F*
W9
W10
A0'
74LS04
U24
11
10
U12
74LS30
W8
A6'
A5'
A4'
A3'
A2'
A1'
IO/M*
U24
74LS04
+5V
R7-6
4.7K
INPUT PORT
U4
74LS244
(TYP)
MEMEX
5 AD3
3 AD2
7 AD1
9 AD0
19
RD*'
74LS32
U16
IN FE*
OBIO*
WR*'
OUT FE*
74LS32
12
READ ONLY MEMORY
DE RAM
U8
17 AD 7
16 AD 6
15 AD 5
14 AD 4
13 AD 3
11 AD 2
10 AD 1
9 AD 0
U9
4K X 8
EPROM
2732A
SOCKET ONLY
A 11' 21
A 10' 19
A 9' 22
A 8' 23
A 7' 1
A 6' 2
A 5' 3
A 4' 4
A 3' 5
A 2' 6
A 1' 7
A 0' 8
CE0* 18
17 AD7
16 AD6
15 AD5
14 AD4
13 AD3
11 AD2
10 AD1
9 AD0
20
RD*'
OUTPUT PORT
P.U.
AD1' 12
OUT FE*
74LS74
U13
Q
Q*
RST*
AD0' 2
MEM
MEM*
IN FE*
XXXX XX0X
OUT FE*
XXXX XX0X
SERIAL RS-232 PORT
+12V
MC1488
SOD
U21
-12V
C33
390pF
DTE
DCE
W11
W12
J1
(26 PIN)
J1-5 RD*
J1-3 TD*
INT 6.5
SID
MC1489A
U20
C31
390pF
MC 1489 A
C30
390pF
W13
W14
J1-9 CTS
J1-14 DTR
+12V
1488
C32
390pF
-12V
J1-13 GND
74LS393
U18
D
C
B
A
U19
(30720₁₀)
7800₁₆
10 MS DURATION COUNTER
RST*
74LS30
U17
74LS74
U14
CLOCK
Q*
10 MS*
P.U.
74LS240
U6
P.U.
MEMORY DECODER
74LS32
U7
74LS156
1G
2G
1Y3
1Y2
1Y1
1Y0
1C
2C
B
A
2Y3
2Y2
2Y1
2Y0
W7
+5V
R7-2
4.7K
CE1*
+5V
R7-3
4.7K
CE0*
74LS08
U25
OBM*
+5V
R15
4.7K
R12
4.7K
R13 47K
R14 10K
U22
LM393
O.C.
RESET*'
C27
10uf
25V
5%
CLEAR COUNTER
OUT FE*
U24
74LS04
AD3'
74LS08
U25
CLOCK
P.U.
74LS74
U14
CLOCK (325.52NS)
74LS32
U16
CLEAR
RST*
SPARES
MC1488
U21
MC1489A
U20

CCD 108255
ASSEMBLY 108256
PARTS LIST 108257

PRO-LOG CORPORATION

DRAWN C.WEAVER	DATE 7-16-81	TITLE 7885 (8085 CPU) PROCESSOR CARD SCHEMATIC	
CHECK	DATE		
APPR	DATE		
APPR	DATE	SIZE D	DOC NO. 108260

REV A
SH 1 OF 1